DESIGNED BY THE ELEMENTS

MODEL: LIO.18215.GR

www.orelighting.com.au



LIORA. Designed by the Elements

Cement Spotlight
Usage: Indoor
Dimensions: Ø66mm x 190mm (H)
Projection: 180mm
Fixture Material: Cement
Fixture Finish: Grey
Globe Base: GU10 - Globe Not Included
Globe(s) Required: 1
Wattage: 5w LED
Voltage Input: 240V
Dimmable: Yes (depending on the selected globe)
IP Rating: IP20
Warranty: 3 years
Must be installed by a licensed electrician

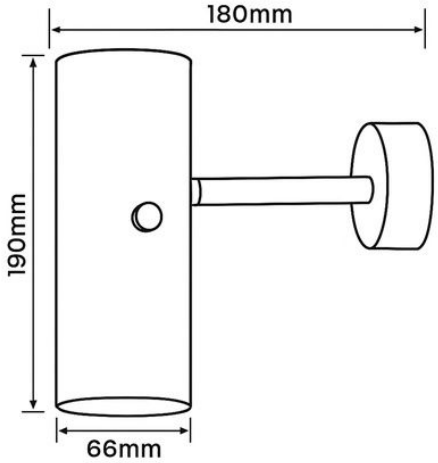

SOLSTICE LIGHTING®

(03) 8595 5587
297 Albert St., Brunswick VIC 3056
solsticelighting.com.au